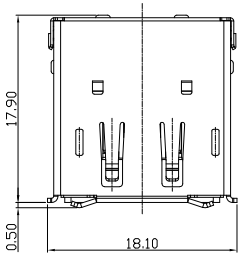

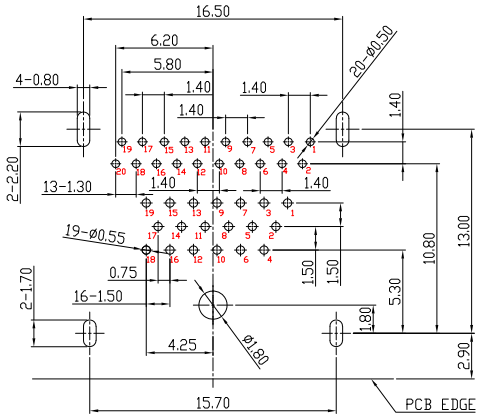

RECOMMENDED PCB LAYOUT (SCALE 1.5:1)
THICKNESS=1.6±0.10mm

MATERIALS:
1. Housing: LCP (UL94 V-0), Black
2. Cover: LCP (UL94 V-0), Black
3. Contact: Brass
4. DP Shell: Stainless Steel
5. HDMI Shell: Brass
6. Rear Cover: Stainless Steel
7. Middle Shield: Stainless Steel

FINISH:
1. Contact: Gold Flash Plated On Contact Area
   Tin Plated On Soldertails
   Nickel Under Plated Over All
2. DP Shell: Nickel Plated
3. HDMI Shell: Nickel Plated

SPECIFICATION:
1. Current: 0.5A
2. Voltage: 40V RMS
3. Dielectric Withstanding Voltage: 500V AC/60S
4. Contact Resistance: 30 mΩ Max.
5. Insulation Resistance: 100MΩ Min. At 500V DC;
6. Temperature Range: -25°C to +85°C

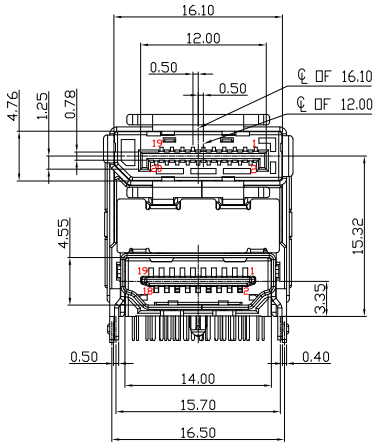

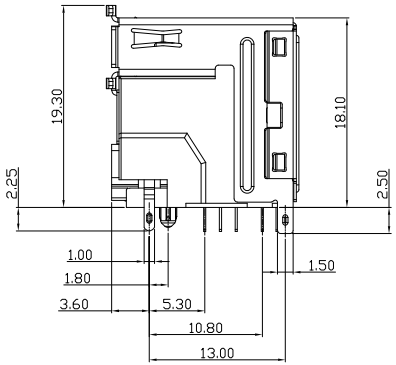

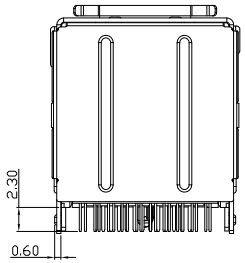

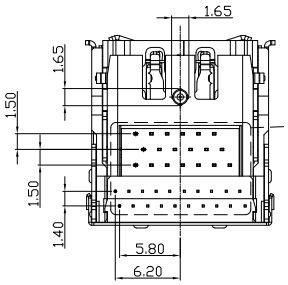

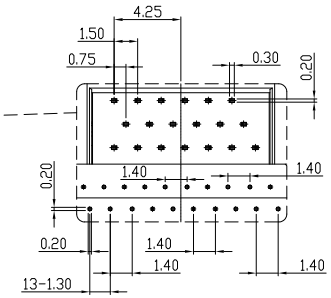

SCALE 1.5:1

僅供參考

XIAN YI PRECISION CO., LTD. 祥益精密股份有限公司				TITLE /品名：DP+HDMI R/A(90度) DIP HDMI腳間距15.70 有柱				核準發行章
				PART NO /料號：PHC39L-11AN-31P0				
APPROVE /核準	CHECKED /審查	DRAWING /繪圖	DRAWING NO /圖號	UNIT /單位				
Xin	Chenrong	Chenrong	A-DM-001-00	mm	SHEET 1 OF 1			
					3			
					2			
					1			
						1.0	圖面僅供參考,實際尺寸以承認圖為主	2025/12/19
					NO.	REV /版本	修訂內容	日期