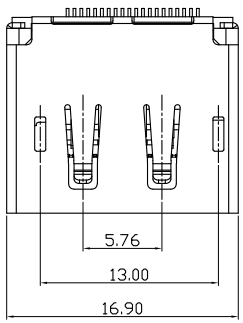


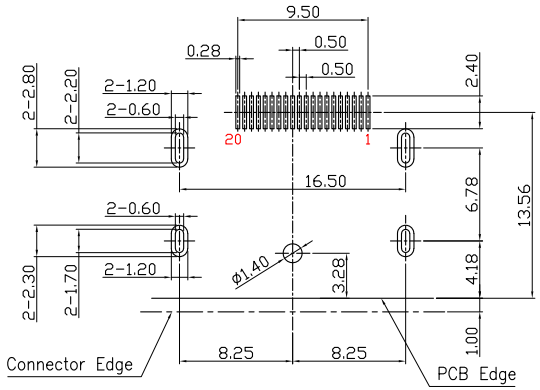


RECOMMENDED PCB LAYOUT
(THICKNESS=1.6)

MATERIALS:
1. Housing: LCP (UL94 V-0), Black
2. Cover: LCP (UL94 V-0), Black
3. Contact: Brass
4. Shell: Brass

FINISH:
1. Contact: Gold Flash Plated On Contact Area
   Tin Plated On Soldertails
   Nickel Under Plated Over All
2. Shell: Nickel Plated

SPECIFICATION:
1. Current: 0.5A
2. Voltage: 40V RMS
3. Dielectric Withstanding Voltage: 500V AC/60S
4. Contact Resistance: 30 mΩ Max.
5. Insulation Resistance: 100MΩ Min. At 500V DC;
6. Operating Temperature: -25°C to +85°C

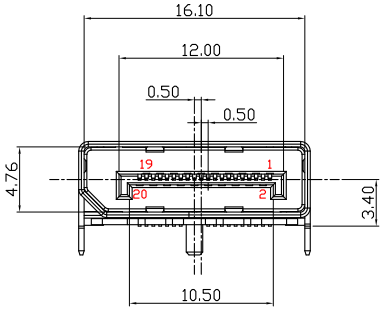


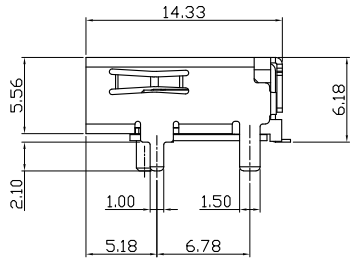


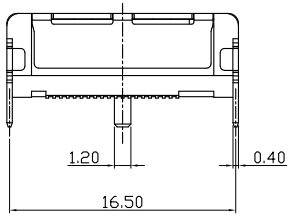


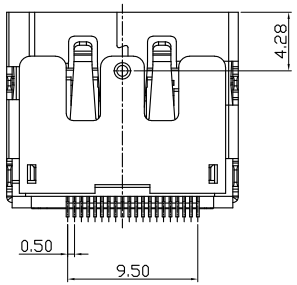


僅供參考

| | | | | | | | | |
|---|---|---|---|---|---|---|---|---|
| XIAN YI PRECISION CO., LTD. 祥益精密股份有限公司 | | | | TITLE /品名：DP 90度 SMD 直腳有柱 (無翻邊) 銅殼 | | | | 核準發行章 |
| | | | | PART NO /料號：DSF20U-11BN-C8R0 | | | | |
| APPROVE /核準 | CHECKED /審查 | DRAWING /繪圖 | DRAWING NO /圖號 | UNIT /單位 | | | | |
| Xin | Chenrong | Chenrong | A-DP-022-00 | mm | SHEET 1 OF 1 | | | |

| NO. | REV /版本 | 修訂內容 | 日期 |
|---|---|---|---|
| 3 | | | |
| 2 | | | |
| 1 | | | |
| | 1.0 | 圖面僅供參考，實際尺寸以承認圖為主 | 2025/12/19 |